KEWAUNEE SCIENTIFIC

SUPREME AIR LV05 HIGH PERFORMANCE BENCH FUME HOOD

OPERATING TYPE

[~] LOW CONSTANT VOLUME DYNAMIC BARRIER BYPASS

SASH TYPE

SELF-CLOSING VERTICAL RISING SASH

[~] FRAMELESS 35-1/2" HIGH 1/4" LAMINATED SAFETY GLASS FOR OPTIMAL UNOBSTRUCTED SIGHT INTO HOOD

28" HIGH OPENING WITH AUTOMATIC HOLD-OPEN LATCH FOR EASY LOADING AND SETUP.
SELF-CLOSING TO 18" FOR LESS EXHAUST VOLUME AND MAXIMUM PROTECTION

STAINLESS STEEL CABLE REINFORCED NOTCHED NYLON BELT AND SPROCKETED SASH COUNTERWEIGHT SYSTEM FOR LEAN, SMOOTH, QUIET SASH OPERATION. SINGLE WEIGHTED TO PREVENT TILTING AND BINDING DURING OPERATION

FLUSH SILL AIRFOIL

[~] 12ga PAINTED COLD ROLLED STEEL FLUSH MOUNTED AIRFOIL PROVIDES PROVIDES OBSTRUCTION FREE, SWEEPING AIRFLOW ACROSS THE WORKSURFACE TO PREVENT BACK FLOW OF AIR.
AIRFOIL IS REMOVABLE TO ALLOW LARGE EQUIPMENT INTO HOOD.

INTERIOR LINER MATERIAL

[G] KEMGLASS 1/4" REINFORCED WHITE FIBERGLASS REINFORCED POLYESTER SHEET MATERIAL - METAL FREE INTERIOR WITH TRIANGULAR SHAPED GASKETED ACCESS PANELS ON EACH SIDE

INTERIOR HEIGHT

48" INTERIOR HEIGHT

BAFFLE SYSTEM

UNIQUE INTERSTITIAL, VERTICAL SLOT BAFFLES FOR EXCEPTIONAL TURBULENCE FREE AIRFLOW AND MINIMAL UPPER VORTEX ROLL. REMOVABLE FOR EASY ACCESS AND HOOD MAINTENANCE.

WIRING OPTION

[H] FACTORY PREWIRED TO A SINGLE JUNCTION BOX ON TOP OF HOOD (UL LISTED PER UL 6101A-1)

POST MOUNTED ELECTRICAL DEVICES

[~] TWO 20amp, 120v AC, GFI DUPLEX RECEPTACLES AND ONE 20amp LIGHT BLACK DEVICES WITH STAINLESS STEEL FACE PLATE

LIGHT FIXTURES

[~] SINGLE TUBE T-5 FLUORESCENT LIGHT FIXTURE WITH BULB

PIPING OPTION

FACTORY PRE-PIPED

FACTORY PIPING CONFIGURATION

[PU] PIPED UP TO A CONNECTION POINT ABOVE TOP OF HOOD

POST MOUNTED SERVICE FIXTURES

[~] REMOTE CONTROL BRASS VALVE WITH PLASTIC COLOR-CODED FOUR ARM HANDLE, NYLON COLOR-CODED PANEL FLANGE, CONNECTORS AND OUTLETS WITH COLOR-CODED EPOXY FINISH.

AIR FLOW ALARM MONITOR

[M] AIR ALERT 600 (TOP RIGHT POST ABOVE BLANK FACE PLATE)

CEILING ENCLOSURE

NOT INCLUDED

EXHAUST COLLAR

[~] STANDARD POLYETHYLENE COLLAR 11-15/16" O.D.
(8' HOODS ARE FURNISHED WITH 2 DUCT COLLARS)

ADDITIONAL STANDARD FEATURES

- CHEMICAL RESISTANT FINISH IS SEFA 8 AND GREEN BUILDING COUNCIL LEED COMPLIANT URETHANE POWDERCOAT FINISH
- TESTED USING BS 7258, DIN 12 924 & ANSI/ASHRAE 110-1995 PROCEDURE TO VERIFY COMPLIANCE WITH ANSI/AIHA Z9.5-2003.
- UL1805 CLASSIFIED WHEN SPECIFIED WITH KEMGLASS [G] OR STAINLESS STEEL [S] LINERS

EXHAUST VOLUMES								
			HIGH SETTING 100 FPM @ 18" 66 FPM @ 28"		MEDIUM SETTING 84 FPM @ 18" 55 FPM @ 28"		LOW SETTING 55 FPM @ 18" 28" NOT RECOMMENDED	
HOOD SIZE	SF OPENING @ 28" SASH OPENING	SF OPENING @ 18" SASH OPENING	CFM	SP	CFM	SP	CFM	SP
48	7.85	5.15	515	.20	430	.15	285	.10

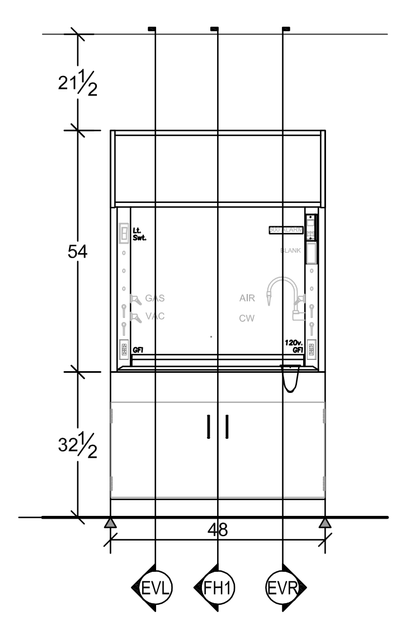

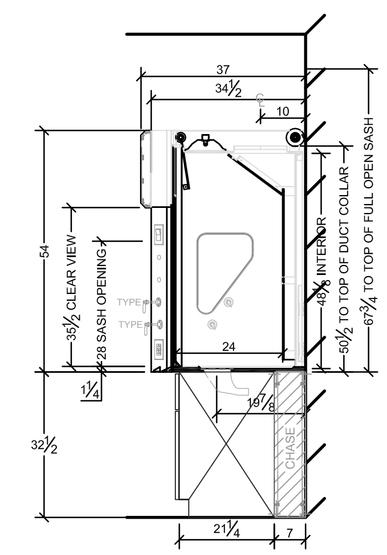

SECTION FH1

ADA BASE CABINETS

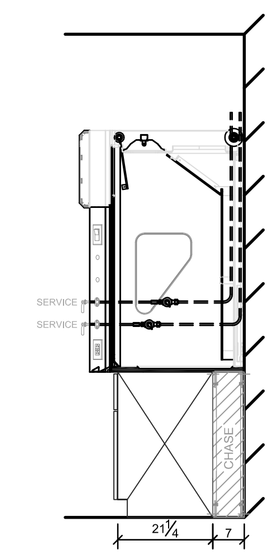

END VIEW - LEFT

PIPING ON LEFT
POST OF FUME HOOD

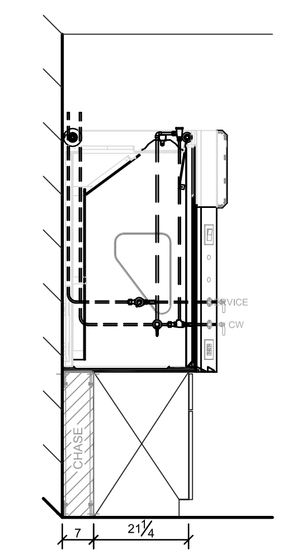

END VIEW - RIGHT

PIPING ON RIGHT
POST OF FUME HOOD

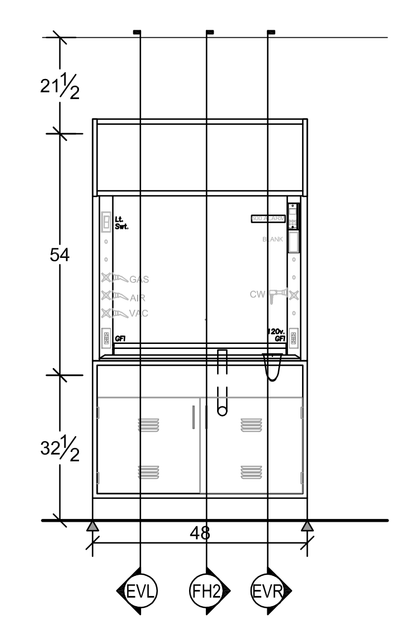

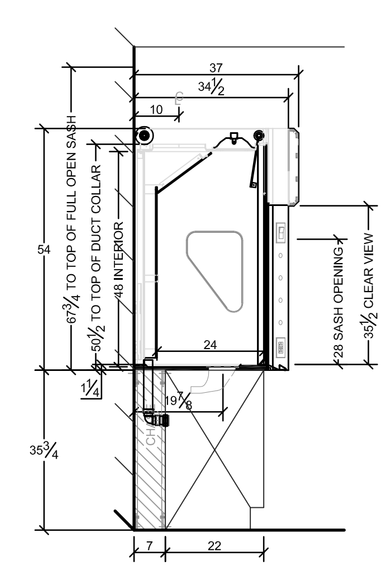

SECTION FH2

STANDING BASE CABINETS

PBCI Engineering
a division of Peno Building Company, Inc.
2746 West College Avenue
State College, PA 16801
phone: 814.234.7366
fax: 814.234.7040
PBCI No. : E33004

© 2013 Peno Building Company, Inc.

PROGRESS DATES

DESIGN REVIEW SET	02/18/13
CODE & BIDDING SET	02/25/13
CODE RESUBMISSION	05/21/13

ST. JOSEPH'S CATHOLIC ACADEMY

901 Boalsburg Pike
Boalsburg, PA 16827

SCIENCE LAB RENOVATIONS

LAB HOOD SECTIONS & SPECIFICATIONS

F4