KEWAUNEE SCIENTIFIC
STYLE 05 CONTEMPORARY SERIES

SQUARE EDGE FULL OVERLAY 3/4" COMPOSITE CORE DOORS AND DRAWERS

ALL CASEWORK, HARDWARE AND FINISHES CERTIFIED
SEFA 8 COMPLIANT
VENEER TYPE
[2] MAPLE
GRAIN DIRECTION
VERTICAL MATCHED
CABINET CORE (SIDES & BOTTOM)
3/4" VENEER CORE HARDWOOD PLYWOOD WITH FRONT EXPOSED EDGES FACED WITH SOLID HARDWOOD EDGING
CABINET TOP FRAME
[~] TWO-PIECE TOP FRAME:
CABINET TOP FRAME CONSISTS OF A 3-1/8"X1" HARDWOOD FRONT RAIL WITH 3MM HARDWOOD FACING WITH A 2-1/2"X1" HARDWOOD PLYWOOD BACK RAIL
INTERMEDIATE FRONT RAILS
[~] WITHOUT
BASE CABINET BACK PANEL
[~] FIXED BACK PANEL
1/4" HARDBOARD BACK IS DADOED INTO END PANELS & BOTTOM AND SECURELY FASTENED.
DRAWER CONSTRUCTION
[~] DRAWERS WITH HARDBOARD BOTTOMS
DRAWER SIDES, BACK AND SUB-FRONT ARE 1/2"T, 9-PLY BIRCH PLYWOOD WITH DOVETAIL JOINTS ATTACHING THE DRAWER SUB-FRONT AND DRAWER BACK TO THE DRAWER SIDES. DRAWER BOTTOMS ARE 1/4"T HARDBOARD SET AND HOT-MELT GLUED INTO 1/4" GROOVES ON ALL FOUR SIDES
SHELF MATERIAL
BASE CABINETS HAVE FULL DEPTH 3/4"T VENEER CORE HARDWOOD PLYWOOD SHELVES.
WALL & TALL CABINETS HAVE 1"T VENEER CORE HARDWOOD PLYWOOD SHELVES.
SAME VENEER SPECIES AS EXTERIOR WITH 1/48" HARDWOOD FACING ON FRONT EDGE.
BASE MATERIAL
[~] PLYWOOD INTEGRAL WITH SIDE PANELS WITHOUT LEVELERS
**TOE KICKS ON TALL CASES 12 & 16"D ARE FLUSH WITH CABINET BODY.*
TOE KICKS ON TALL CASES 22"D ARE RECESSED TO LINE UP WITH ADJACENT BASE CABINETS
PULL STYLE
[1] ROUNDED ALUMINUM
PULL CONFIGURATION
HORIZONTAL ON DRAWERS, VERTICAL ON DOORS
HINGE STYLE
5-KNUCKLE INSTITUTIONAL OFFSET TYPE,
2-3/4"L APPLIED TO WITHSTAND A WEIGHT LOAD OF 150lbs
[0] STAINLESS STEEL
DRAWER SUSPENSION
[~] ZINC PLATED, COLD ROLLED STEEL, FULL EXTENSION, LINEAR BALL BEARING SLIDES RATED AT 100lbs DYNAMIC LOAD
THE DRAWER IS REMOVABLE WITHOUT THE USE OF TOOLS
CATCHES
SPRING-LOADED POLYETHYLENE ROLLER WITH STEEL STRIKE PLATE
SHELF SUPPORT CLIPS
CLEAR TWIN PIN TYPE CORROSION RESISTANT WITH HOLD DOWN FEATURE
LABEL HOLDERS
[~] NONE AT GENERAL CASEWORK
(AT FILE DRAWERS ONLY)
FINISH
FORMULATED FOR CHEMICAL RESISTANCE TO MEET **SEFA 8** PERFORMANCE STANDARDS. SURFACES ARE FINISHED WITH A CHEMICAL RESISTANT SYNTHETIC VARNISH SYSTEM UTILIZING A LOW VOC FLAT LINE FINISHING PROCESS
SAFETY GLASS
[R] 1/8" TEMPERED SAFETY GLASS ON FRAMED SLIDING AND SWINGING DOORS

KEWAUNEE SCIENTIFIC
STYLE 01 TRADEMARK SERIES

SQUARE EDGE DESIGN WITH POWDER COATED PLAIN INSET STEEL DOORS ON STEEL

ALL CASEWORK, HARDWARE AND FINISHES CERTIFIED **SEFA 8** COMPLIANT
PULL STYLE
[1] ROUNDED ALUMINUM
PULL LOCATION
HORIZONTAL ON DRAWERS, VERTICAL ON DOORS
WALL & TALL CASES ALWAYS HAVE VERTICAL PULLS
HINGE STYLE
5 KNUCKLE STAINLESS STEEL 2-1/2"H
DOOR CATCH
POSITIVE DOOR LATCHING MECHANISM WITH SELF CLOSING FEATURE (NO ROLLER CATCH)
BASE UNIT SHELVING
FULL LENGTH AND WIDTH ADJUSTABLE SHELVING WITH HEAVY DUTY PLATED STEEL SHELF CLIPS
REMOVABLE BACK
[~] FULL HEIGHT AT BASE CABINET DOORS ONLY
LABEL HOLDERS
[~] NONE AT GENERAL CASEWORK
(AT FILE DRAWERS ONLY)
DRAWER SLIDES
[~] 100# 3/4 EXTENSION, EPOXY COATED
150# STATIC RATED, SEFA CERTIFIED

COUNTER TOPS

ALL TOPS TO BE MAXIMUM PRACTICAL LENGTHS DO NOT LOCATE JOINTS ABOVE KNEE SPACE AREAS

EPOXY TOPS TO BE 1" THICK WITH 4" HIGH APPLIED CURB AND INTEGRAL DRIP EDGE AS MANUFACTURED BY DURCON, INC

FINISHED EDGE PROFILE: 1/8" BEVELED

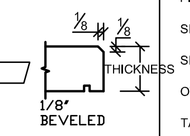

PLASTIC LAMINATE [CHEMSURF] TOPS TO BE 1" THICK AS MANUFACTURED BY KEWAUNEE SCIENTIFIC

FINISHED EDGE PROFILE: 3MM EDGE BAND

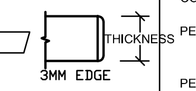

SYMBOL LEGEND

- A — CABINET FILLERS AND COMPONENTS
- A — VERTICAL SERVICE PEDESTALS
- A — FUME HOODS AND COMPONENTS
- A — NON-STANDARD CONFIGURATIONS
- EP — WOOD EXTENDED END PANELS

NOTATION LEGEND

- PROJECT MANAGER NOTE
- FIXTURE TYPE NOTE
- INSTALLER NOTE
- TOP MFR OR OTHER NOTE

FIXTURES, SINKS & ACCESSORIES

ALL WALL MOUNTED SERVICE FITTINGS AND SAFETY SHOWERS ARE TURNED OVER TO THE PLUMBER FOR INSTALLATION

FIXTURES	POLISHED CHROME
SINKS	EPOXY RESIN DROP IN
SINKS OUTLET	1 1/2" THREADED OUTLET
OVERFLOWS	OPEN END
TAILPIECES	BY OTHERS
TRAPS	BY OTHERS
FINAL CONNECTIONS	BY OTHERS
COVE BASE	BY OTHERS
PEGBOARD	EPOXY RESIN WHITE POLYPROPYLENE PEGS
PEGBOARD TROUGH	2" STAINLESS STEEL DRIP TROUGH

COLOR SELECTIONS (REQUIRED PRIOR TO ORDER)

COUNTERTOP COLOR (DURCON)	BLACK ONYX
COUNTERTOP COLOR (PLAM)	BLACK
CABINET BASE COLOR (STEEL) SHELL, TRIM/FILLER	NO. 61 LIGHT NEUTRAL
CABINET ACCENT COLOR (STEEL) DOOR & DRAWER HEAD	NO. 61 LIGHT NEUTRAL
DRAWER BOX AND REMOVABLE ACCESS PANEL	NO. 61 LIGHT NEUTRAL
FUME HOOD BASE COLOR (STEEL)	NO. 61 LIGHT NEUTRAL
FUME HOOD ACCENT COLOR (STEEL)	NO. 61 LIGHT NEUTRAL
PEGBOARD COLOR (EPOXY)	BLACK ONYX
CABINET EXTERIORS (WOOD)	NO. 208 WINCHESTER MAPLE
CABINET INTERIORS AND BACK OF DOORS (WOOD)	CUSTOM
CAULK TYPE (DEFAULT:PAINTABLE LATEX)	CUSTOM
CAULK COLOR (DEFAULT:WHITE)	CUSTOM

LOCKS (REQUIRED PRIOR TO ORDER)

KEYING REQUIREMENTS

- ☐ NO LOCKS
- ☐ ALL ALIKE
- ☐ ALL DIFFERENT
- ☐ ALIKE BY ROOM
- ■ OTHER: SEE KEY SCHEDULE

LOCK LEGEND

[K] DISK LOCKS WITHOUT LOCK PANELS (DOOR/DRAWER UNITS)

TEACHERS BENCH LOCATIONS ONLY

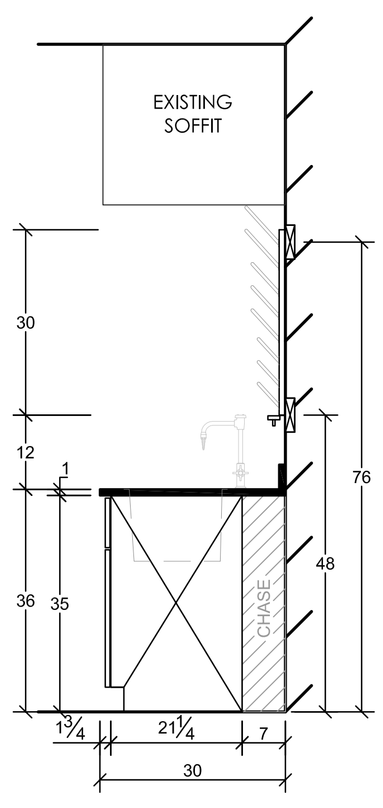

SECTION A
SCALE: 1/2" = 1'-0"

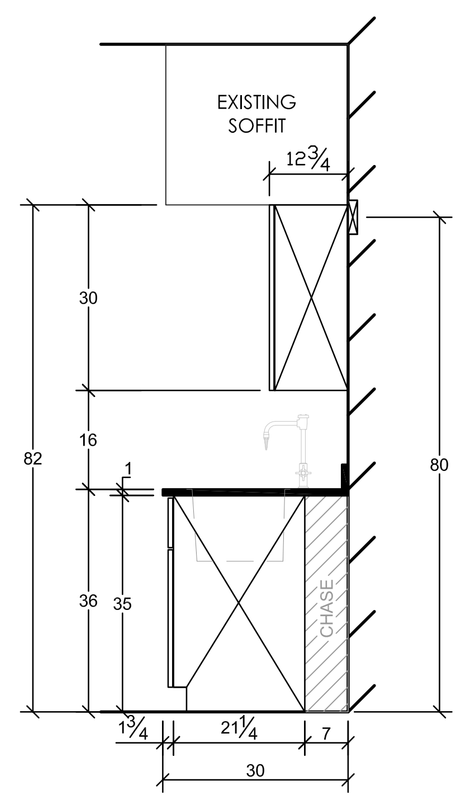

SECTION B
SCALE: 1/2" = 1'-0"

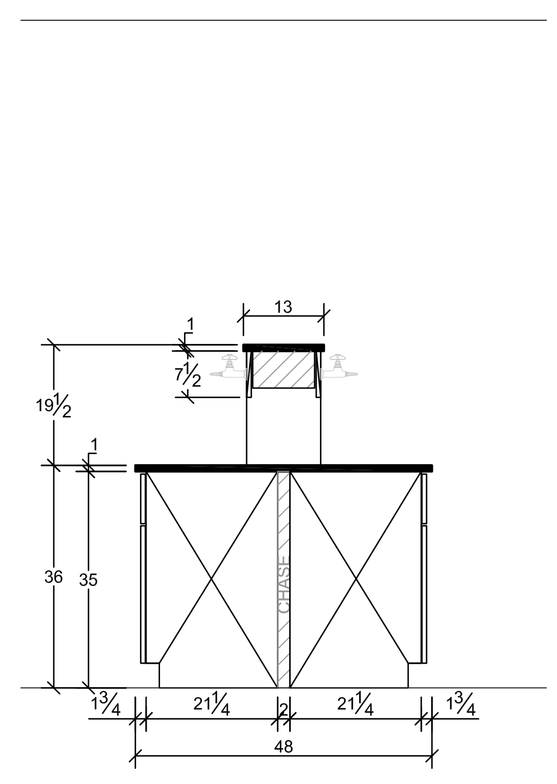

SECTION C
SCALE: 1/2" = 1'-0"

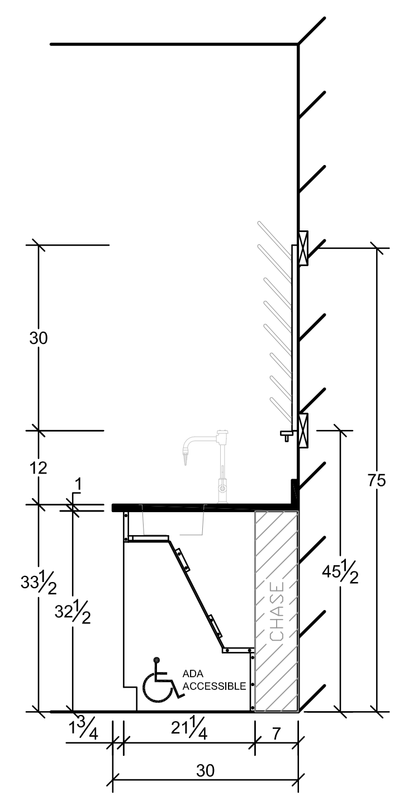

SECTION D
SCALE: 1/2" = 1'-0"

PBCI Engineering
a division of Peno Building Company, Inc.
2746 West College Avenue
State College, PA 16801
phone: 814.234.7366
fax: 814.234.7040
PBCI No. : E33004

© 2013 Peno Building Company, Inc.

COMMONWEALTH OF PENNSYLVANIA REGISTERED PROFESSIONAL ENGINEER FRANK ALAN PENO 55835-E
2-25-13

PROGRESS DATES

DESIGN REVIEW SET	02/18/13
CODE & BIDDING SET	02/25/13

ST. JOSEPH'S CATHOLIC ACADEMY

901 Boalsburg Pike
Boalsburg, PA 16827

SCIENCE LAB RENOVATIONS

LAB EQUIPMENT SECTIONS & SPECIFICATIONS

F3